SOAD-34x

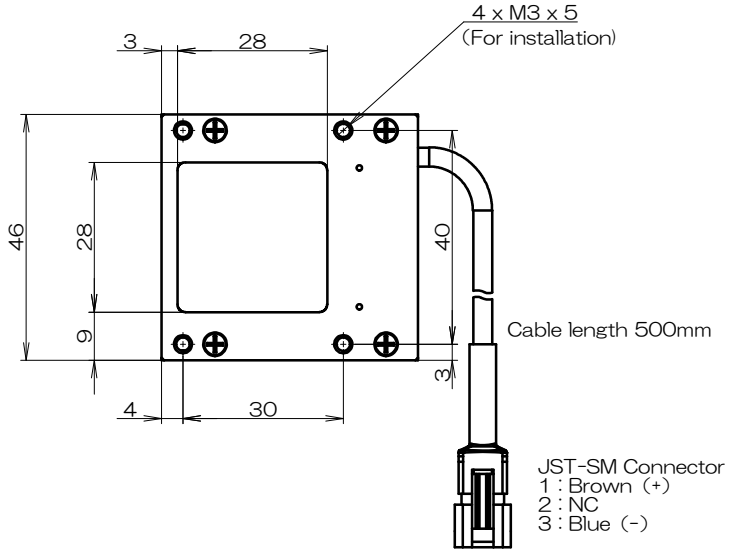

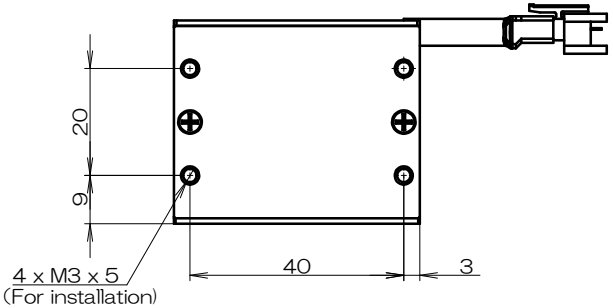

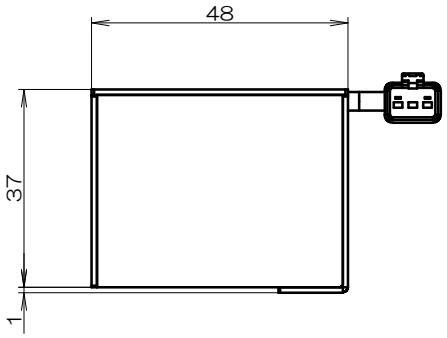

Copyright(C) 2015 CCS Asia PTE LTD. All rights reserved.
Reproduction or photocopy without permission is prohibited.

Input Voltage : DC24V
Power Consumption : 3.2W (R,G,B)
5.3W (W)